GAM PRODUCTS, INC.
4975 West Pico Blvd.
Los Angeles, CA 90019
TEL: [323] 935.4975
FAX: [323] 935.2002
www.gamonline.com

1:1 Scale
15 Gauge Aluminum (.057”) 2/14/12

SX4™ GOBO / DISC TRAY - OUTSIDE VIEW

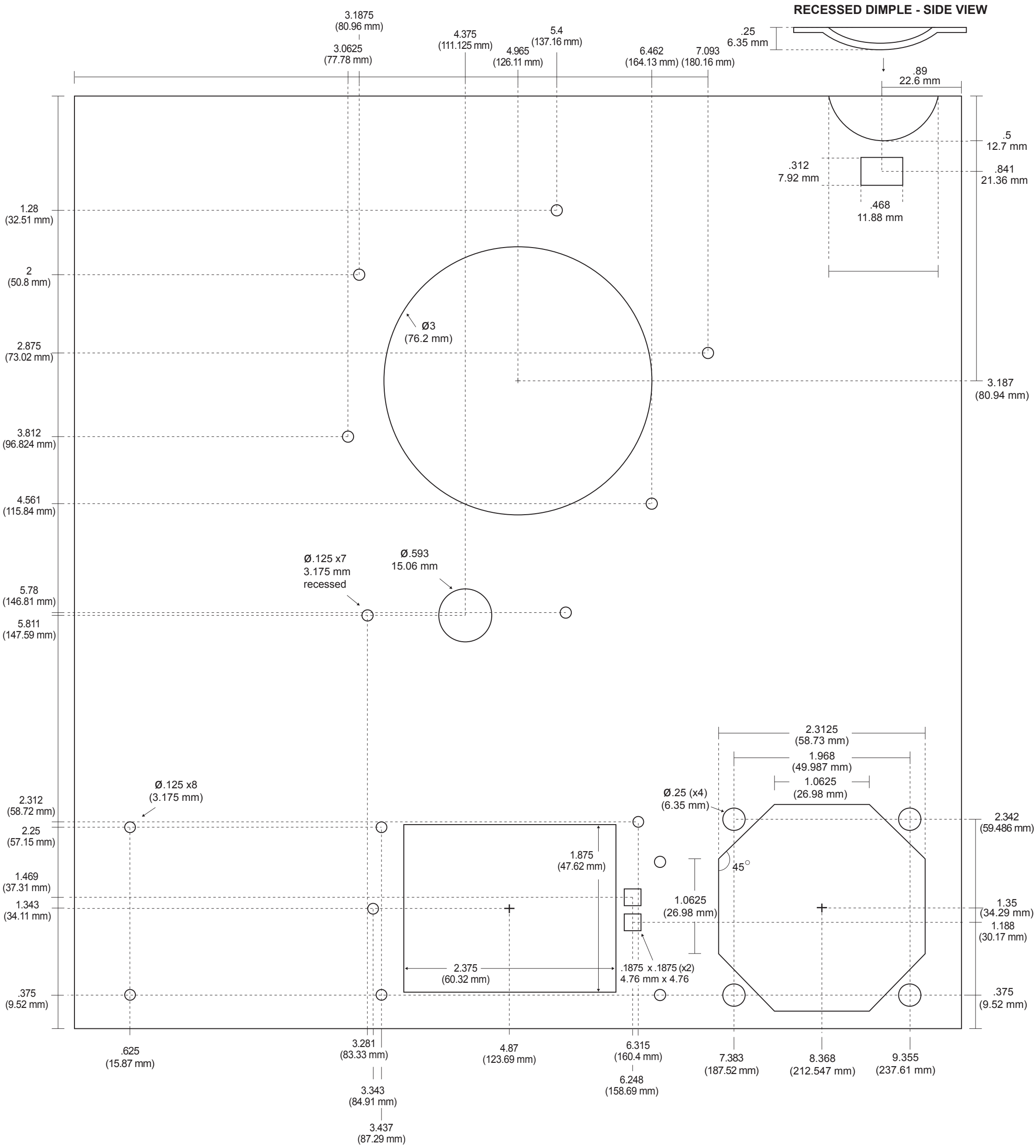

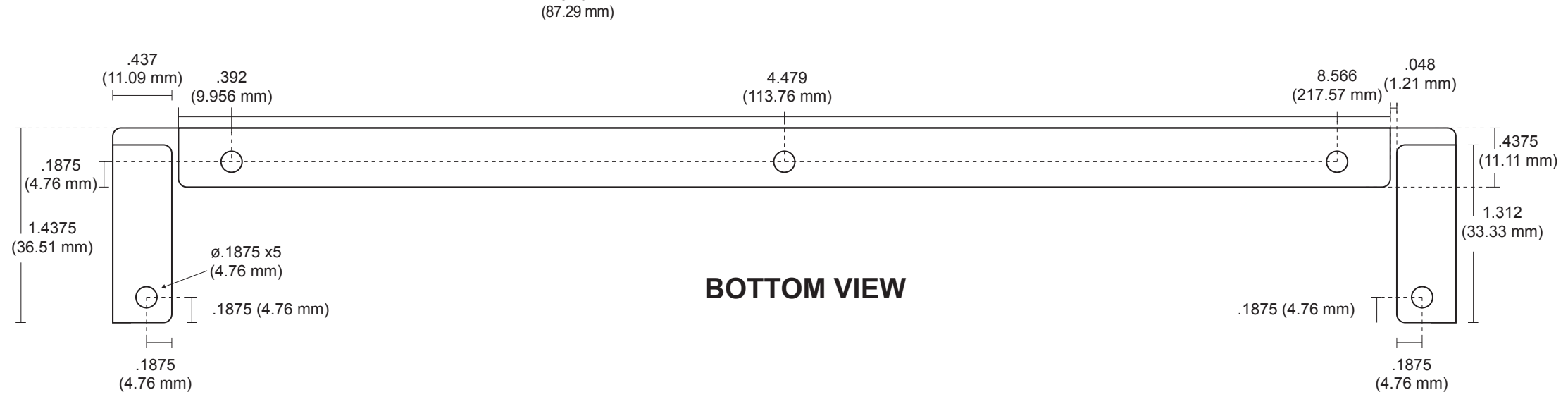

BOTTOM VIEW